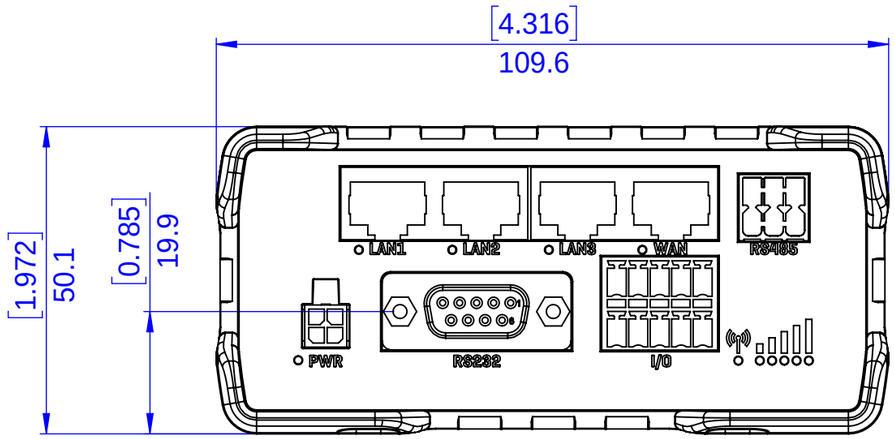

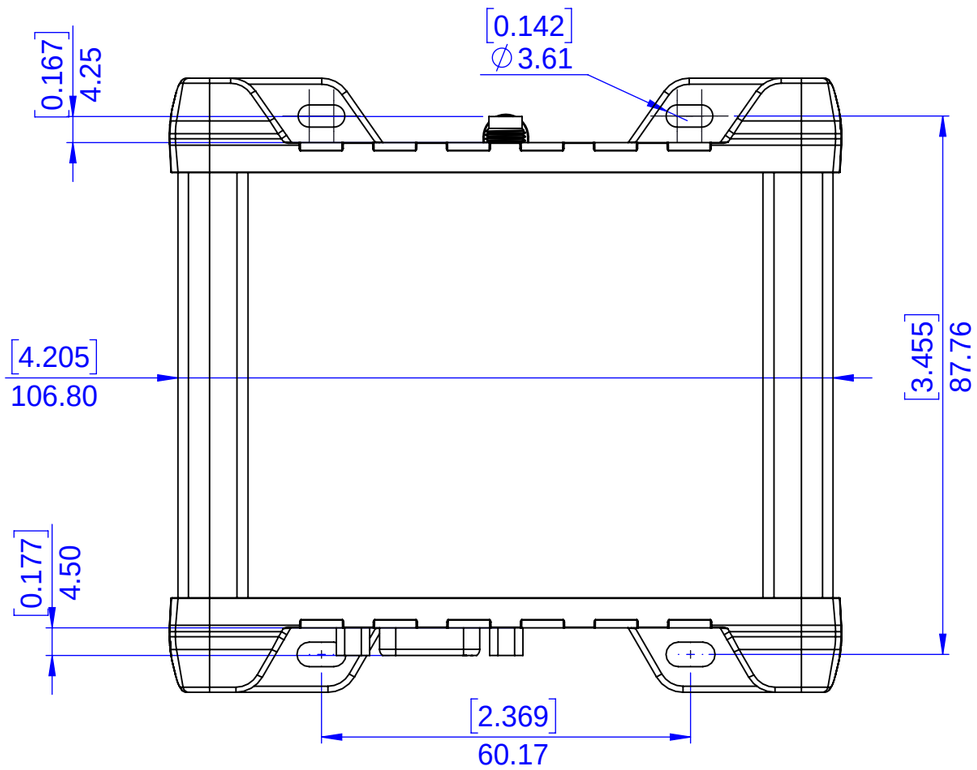

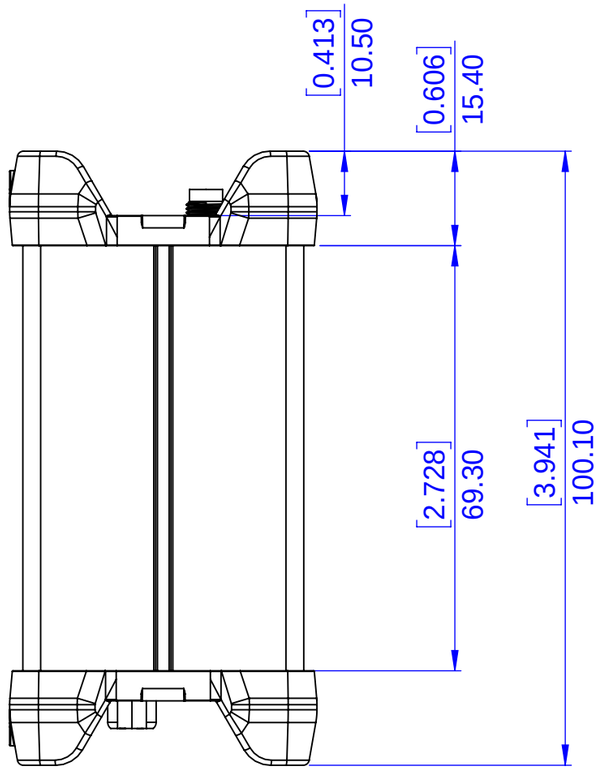

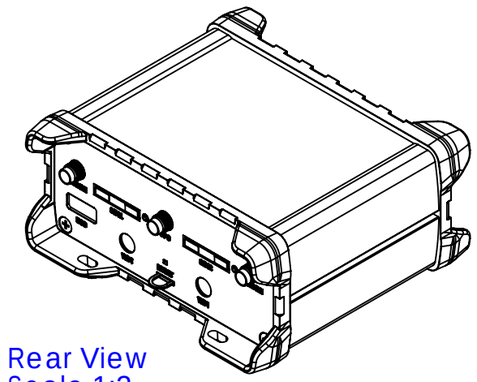

Rear View
Scale 1:2

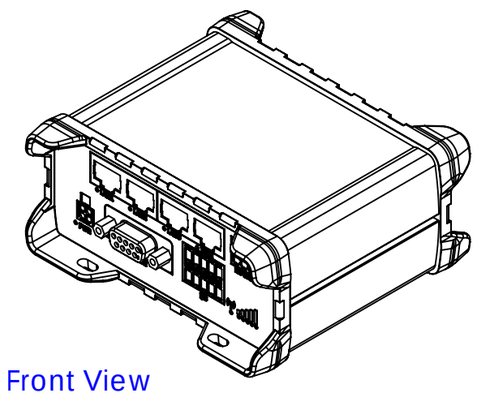

Front View
Scale 1:2

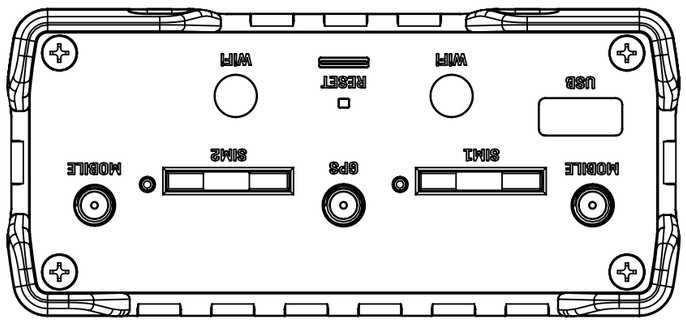

Notes:

1. Dimension in [ ] are in inches

The above constitute the property of Unitronics (1989)(R"G) Ltd., and are protected by copyright laws as its "creation". Unitronics (1989)(R"G) Ltd. retains all rights to its proprietary assets including, but not limited to the drawings, sketches and drafts, and shall remain the property of Unitronics (1989)(R"G) Ltd. Copyright protection claimed includes all forms and matters of materials and information. Any unauthorized use, copying, quoting, sale, distribution, transfer, assignment, giveaway, rent, lease, sublicense or dispose thereof are strictly prohibited without prior written permission from Unitronics (1989)(R"G) Ltd.

UNITRONICS®
P.O.B. 300, Ben Gurion Airport, Israel 70100, Unitronics Building, Airport City Tel: +972 (3) 9778888 Fax: +972 (3) 9778877

	ID/SIGNATUR	DATE	DIMENSIONS ARE IN mm	
DESIGNED			TOLERANCES UNLESS OTHERWISE SPECIFIED	
DRAWN	L.B	20.04.2020	LINEAR	Ñ0.1mm
CHECKED			ANGULAR	Ñ0.5Á
Q.A				
APPV'D				
FINISH:		First Angle		

TITLE:
Unitronics Router
B8

Project:

P.N
UCR-ST-B8

SHEET SIZE
A3

REV
A

SCALE:1:1

SHEET 1 OF 1