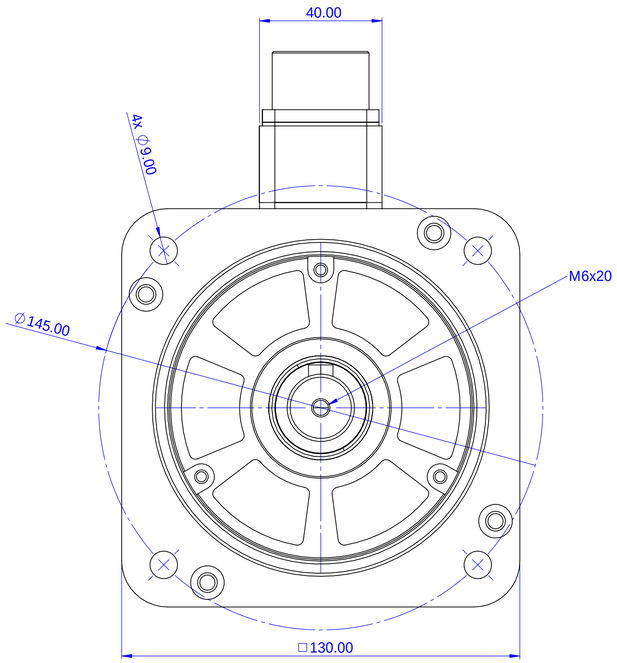

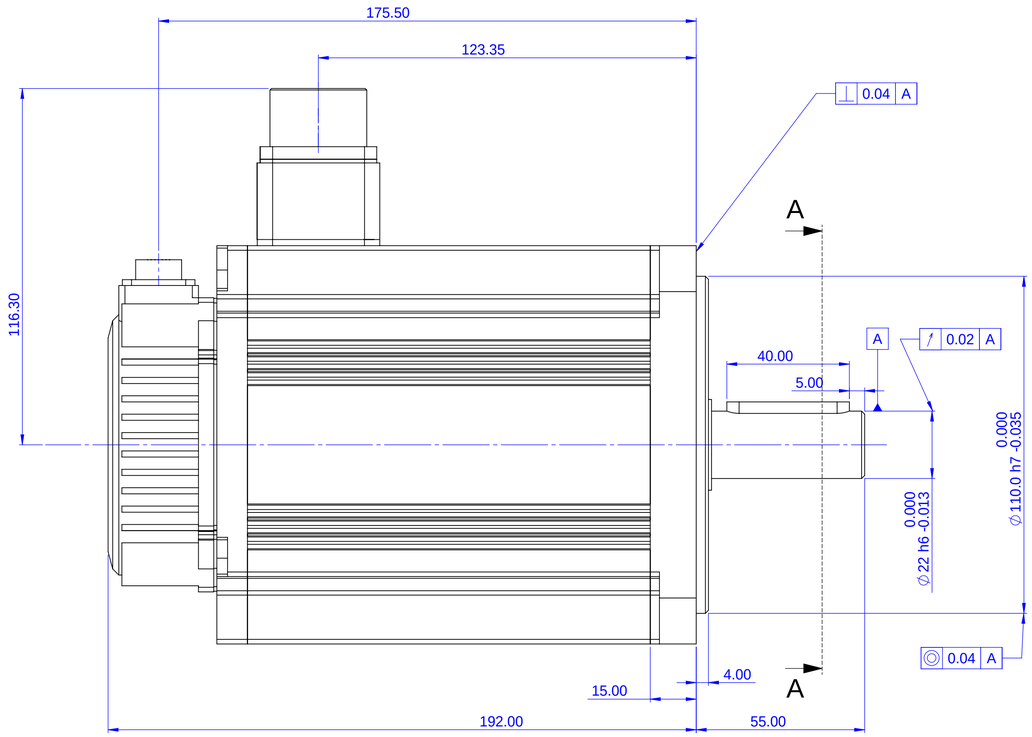

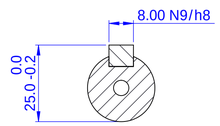

SECTION A-A

Notes:
1. Dimension in [ ] are in inches

Part Number	Description
UMM-0020EA-B2	SERVO MT 2kW 400V,3 A23 B2
UMM-0020CA-B2	SERVO MT 2kW 200V,3 A23 B2

The above constitute the property of Unitronics (1989)(R"G) Ltd., and are protected by copyright laws as its "creation". Unitronics (1989)(R"G) Ltd. retains all rights to its proprietary assets including, but not limited to the drawings, sketches and drafts, and shall remain the property of Unitronics (1989)(R"G) Ltd. Copyright protection claimed includes all forms and matters of materials and information. Any publication, use, copying, quoting, sale, distribution, transfer, assignment, giveaway, rent, lease, sublicense and/or purpose thereof are strictly prohibited without prior written permission from Unitronics (1989)(R"G) Ltd.

	SIGNATUR	DATE
DESIGNED	L.B	30.12.2021
DRAWN	L.B	30.12.2021
CHECKED		
Q.A		
APPV'D	-	
FINISH		

DIMENSIONS ARE IN mm
TOLERANCES UNLESS OTHERWISE SPECIFIED
LINEAR -
ANGULAR -
First Angle

UNITRONICS®
P.O.B. 300, Ben Gurion Airport, Israel 70100, Unitronics Building, Airport City Tel: +972 (3) 9778888 Fax: +972 (3) 9778877

TITLE: Servo Motor
Project:
P.N
REV A
SHEET SIZE A1
SCALE:1:1
SHEET 1 OF 1