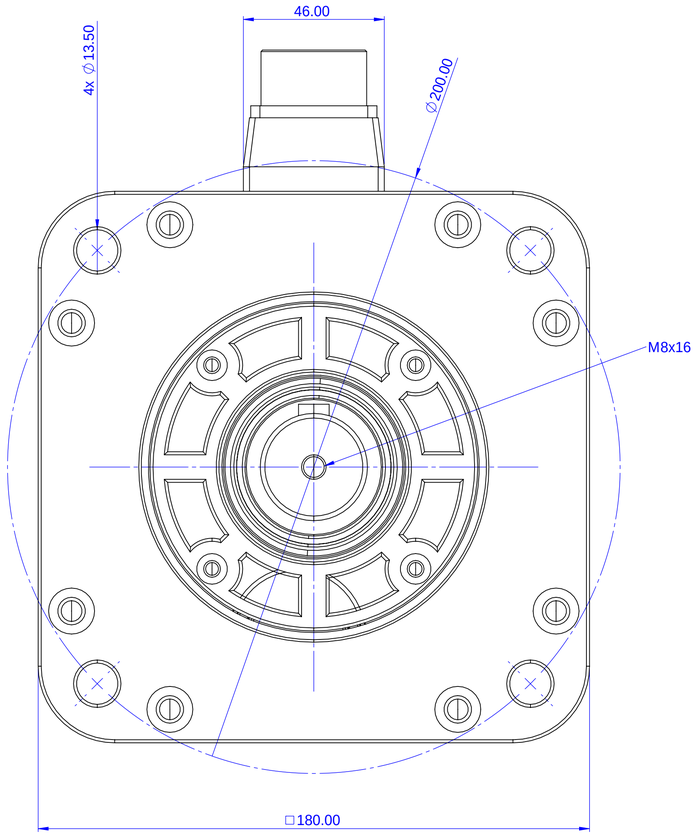

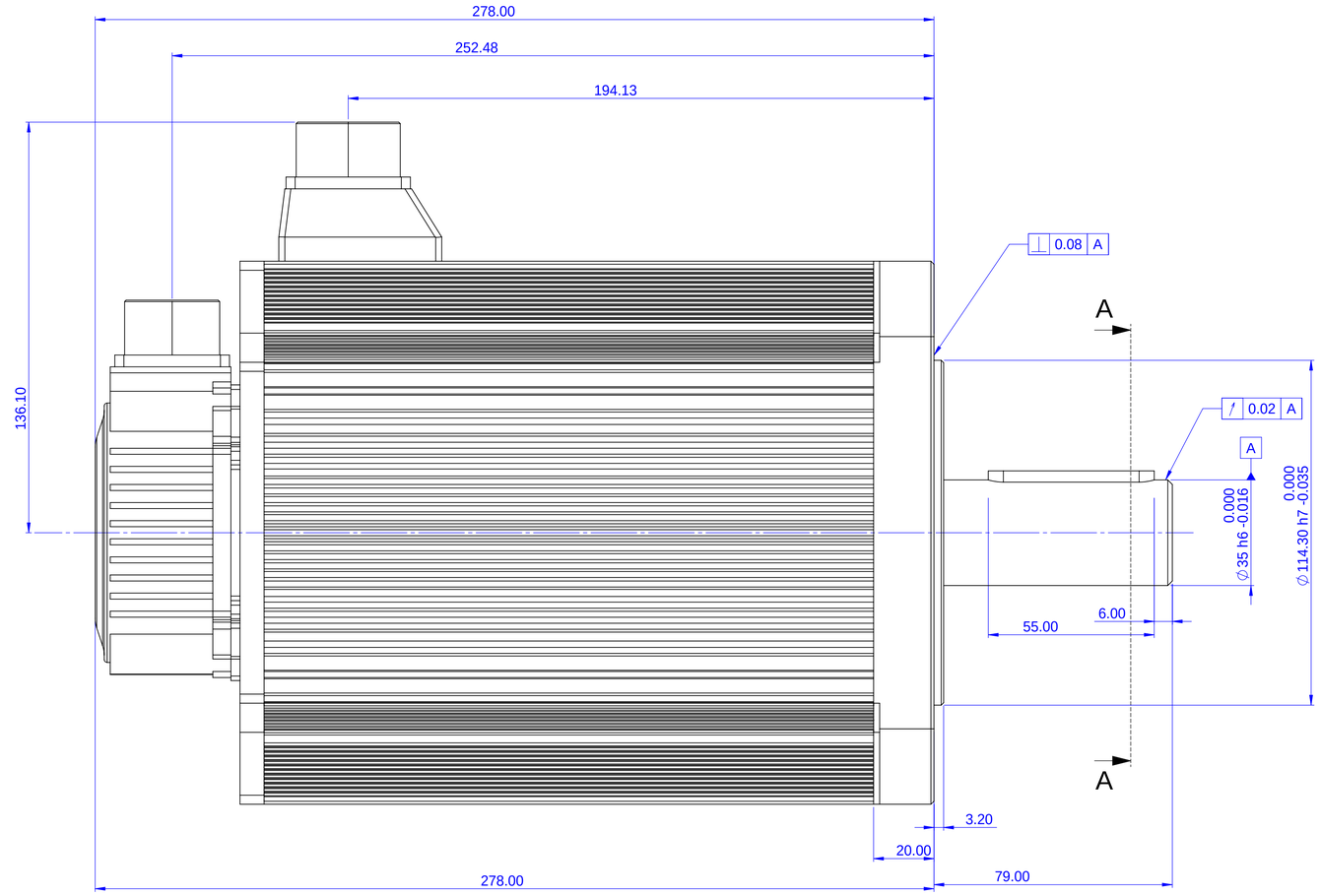

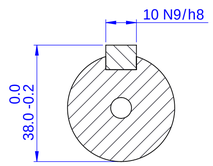

SECTION A-A

Notes:
1. Dimension in [ ] are in inches

Part Number	Description
UMM-0050EA-B3	SERVO MT 5kW 400V,3 A23 B3
UMM-0050CA-B3	SERVO MT 5kW 200V,3 A23 B3

The above constitute the property of Unitronics (1989)(R"G) Ltd., and are protected by copyright laws as its "creation". Unitronics (1989)(R"G) Ltd. retains all rights to its proprietary assets including, but not limited to the drawings, sketches and drafts, and shall remain the property of Unitronics (1989)(R"G) Ltd. Copyright protection claimed includes all forms and matters of materials and information. Any unauthorized use, copying, quoting, sale, distribution, transfer, assignment, giveaway, rent, lease, sublicense or dispose thereof are tirctly prohibited without prior written permission from Unitronics (1989)(R"G) Ltd.

UNITRONICS®
P.O.B. 300, Ben Gurion Airport, Israel 70100, Unitronics Building, Airport City Tel: +972 (3) 9778888 Fax: +972 (3) 9778877

	ID/SIGNATUR	DATE	DIMENSIONS ARE IN mm
DESIGNED	L.B	30.12.2021	TOLERANCES UNLESS OTHERWISE SPECIFIED
DRAWN	L.B	30.12.2021	LINEAR -
CHECKED			ANGULAR -
Q.A.			
APPV'D	-		
FINISH			First Angle

TITLE: Servo Motor

Project:

P.N -

REV A

SHEET SIZE A1

SCALE 1:1

SHEET 1 OF 1